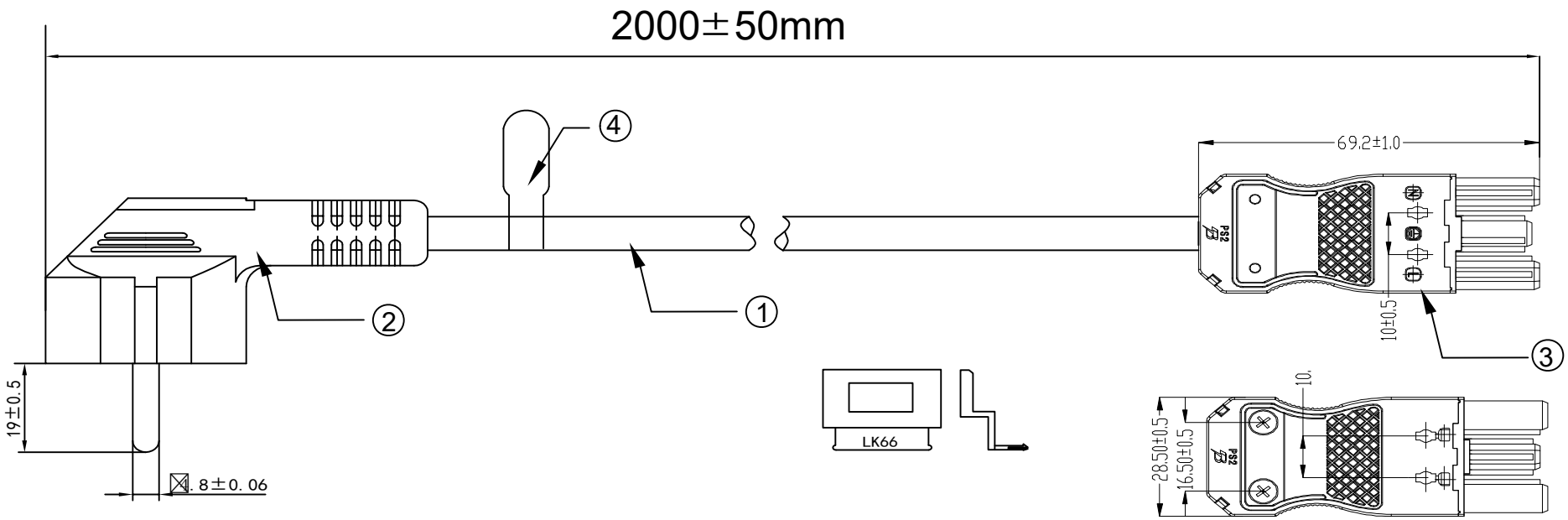

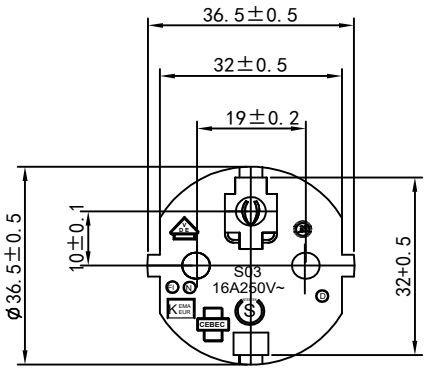

H05VV-F 3X1.5mm^2

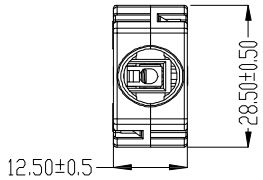

NO.	PARTS NAME	Q'TY	SPECIFICATION
④	TAG	1PCS	DELTACO TAG
③	GST 18 Female	1PCS	BLACK ABS
②	CEE7/7 90°	1PCS	BLACK PVC
①	CABLE	1PCS	H05VV-F 3*1.5mm² BLACK PVC JACKET OD:7.8±0.2mm

APPROVED	CHECKED	DRAWN	ITEM NO.	DEL-118I2
			DRAW NO.	
			UNIT	mm
			SCALE	NONE

DESCRIPTION:

CEE7/7 90°------GST 18 FEMALE
H05VV-F 3*1.5mm²
2m

DELTACO